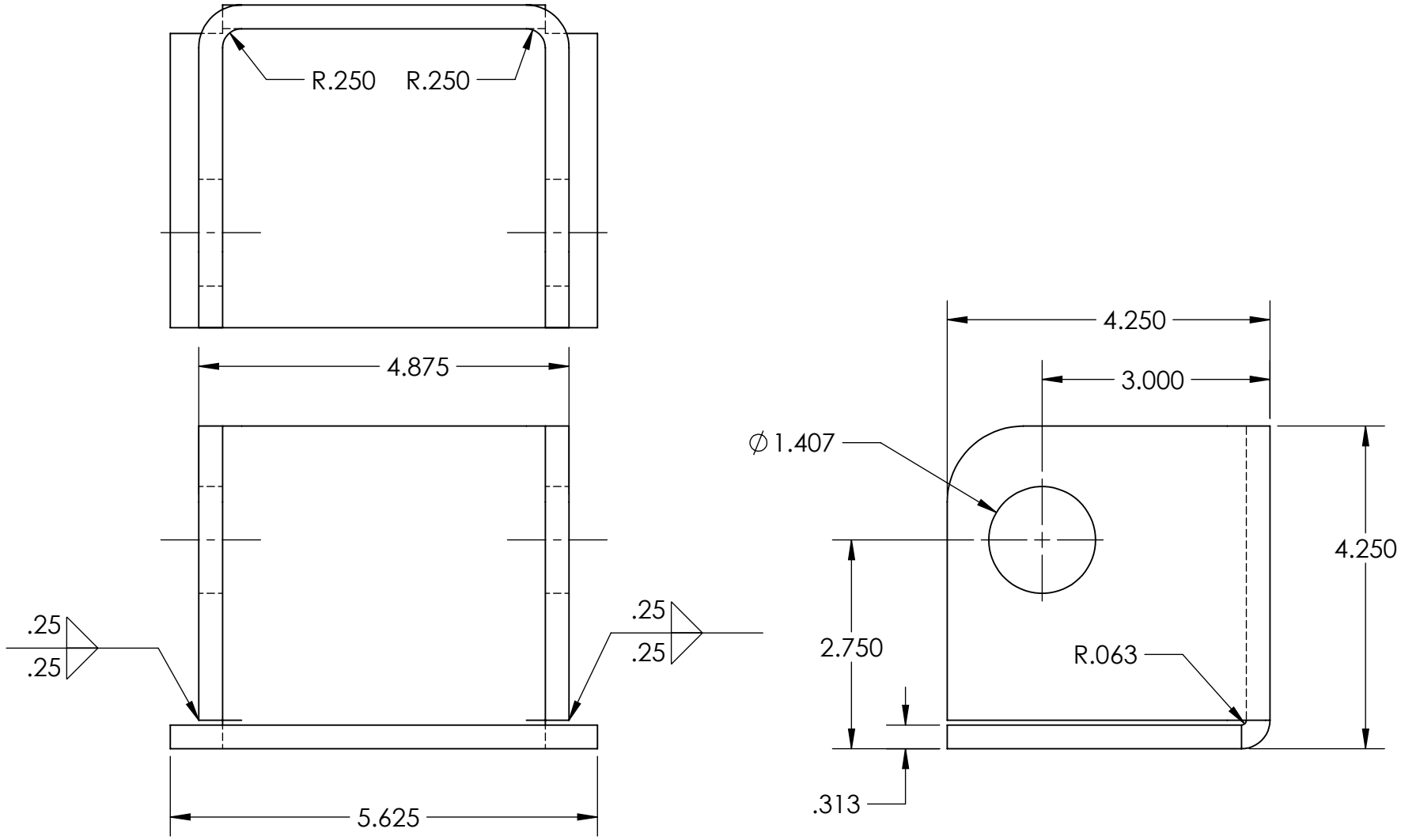

UNLESS OTHERWISE SPECIFIED:		NAME	DATE
DIMENSIONS ARE IN INCHES TOLERANCES: ±.062 ANGULAR: MACH ±.15° ANGULAR BEND ±1° HOLE DIAMETER: ±.010 MACHINING FINISH: N8	DRAWN	GFF	
	CHECKED		
	ENG APPR.		
	MFG APPR.		
INTERPRET GEOMETRIC TOLERANCING PER:	Q.A.		
MATERIAL AISI 1020 CR STEEL	COMMENTS:		
FINISH			
DO NOT SCALE DRAWING			

Premium Supply
Greenville, Texas

TITLE:

HINGE-FRAME

SIZE	DWG. NO.	REV
A	190066-1	1
SCALE: 1:2	WEIGHT: 6.02	SHEET 1 OF 1

NONE

PROPRIETARY AND CONFIDENTIAL

THE INFORMATION CONTAINED IN THIS DRAWING IS THE SOLE PROPERTY OF PREMIUM SUPPLY. ANY REPRODUCTION IN PART OR AS A WHOLE WITHOUT THE WRITTEN PERMISSION OF PREMIUM SUPPLY IS PROHIBITED.

ZONE	REV.	DESCRIPTION	DATE	APPROVED
	1	DRAWN	11/3/2012	

REVISIONS

5 4 3 2 1

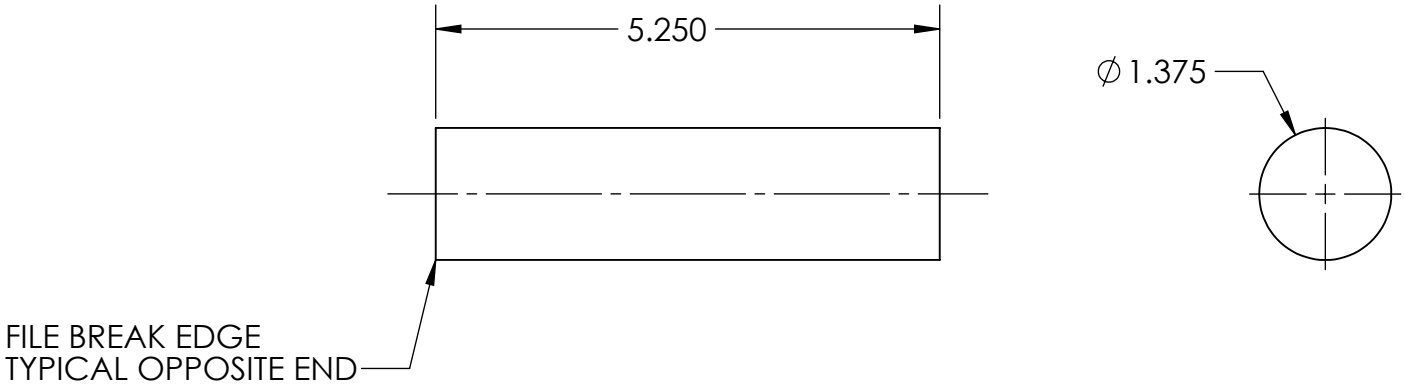

	1	DRAWN	11/3/2012	
ZONE	REV.	DESCRIPTION	DATE	APPROVED
REVISIONS				

PROPRIETARY AND CONFIDENTIAL

THE INFORMATION CONTAINED IN THIS DRAWING IS THE SOLE PROPERTY OF PREMIUM SUPPLY. ANY REPRODUCTION IN PART OR AS A WHOLE WITHOUT THE WRITTEN PERMISSION OF PREMIUM SUPPLY IS PROHIBITED.

UNLESS OTHERWISE SPECIFIED:

DIMENSIONS ARE IN INCHES
TOLERANCES: ±.062
ANGULAR: MACH ±.15°
ANGULAR BEND ±1°
HOLE DIAMETER: ±.010
MACHINING FINISH: N8

INTERPRET GEOMETRIC TOLERANCING PER:

MATERIAL
AISI1020 CR STEEL

FINISH
NONE

DO NOT SCALE DRAWING

	NAME	DATE
DRAWN	GFF	
CHECKED		
ENG APPR.		
MFG APPR.		
Q.A.		

COMMENTS:

Premium Supply
Greenville, Texas

TITLE:

HINGE-PIN

HINGE-BAR

SIZE	DWG. NO.	REV
A	190066-2	1

SCALE: 1:2 | WEIGHT: 2.22 | SHEET 1 OF 1

5 4 3 2 1

ITEM NO.	QTY.	DESCRIPTION
1	1	BAR AISI1020 CR STEEL
2	2	BAR-AISI1020 CR STEEL
3	1	TUBE- ASTM A513 DOM TUBING

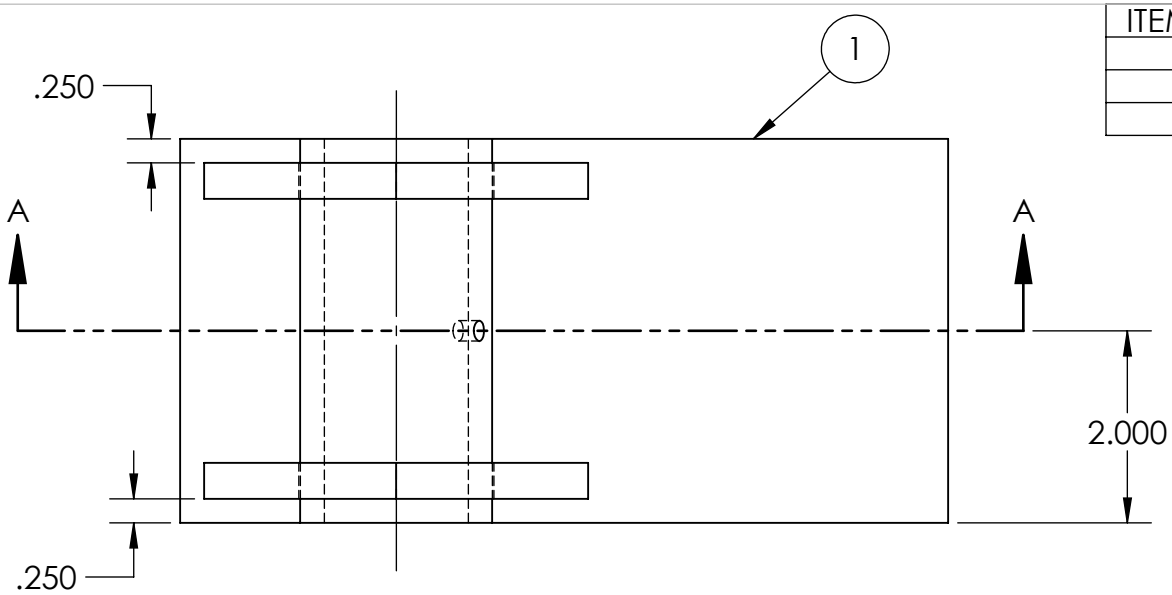

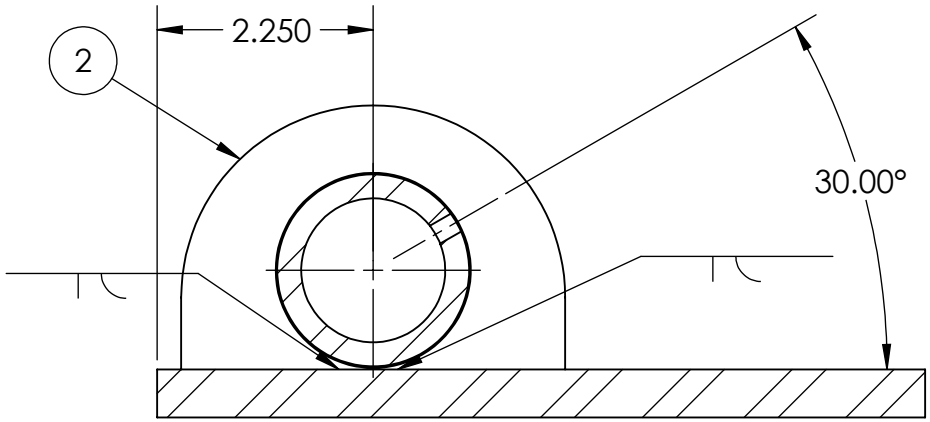

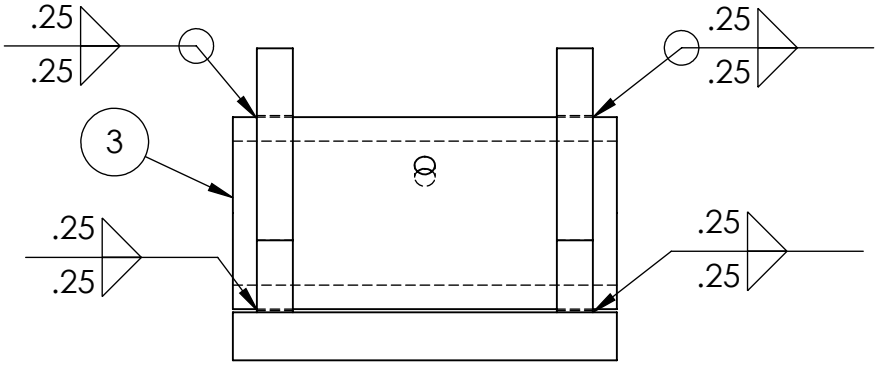

SECTION A-A

	1	DRAWN	11/3/2012	
ZONE	REV.	DESCRIPTION	DATE	APPROVED
REVISIONS				

PROPRIETARY AND CONFIDENTIAL

THE INFORMATION CONTAINED IN THIS DRAWING IS THE SOLE PROPERTY OF PREMIUM SUPPLY. ANY REPRODUCTION IN PART OR AS A WHOLE WITHOUT THE WRITTEN PERMISSION OF PREMIUM SUPPLY IS PROHIBITED.

UNLESS OTHERWISE SPECIFIED:

DIMENSIONS ARE IN INCHES
TOLERANCES: ±.062
ANGULAR: MACH ±.15°
ANGULAR BEND ±1°
HOLE DIAMETER: ±.010
MACHINING FINISH: N8

INTERPRET GEOMETRIC TOLERANCING PER:

MATERIAL
SEE TABLE

FINISH
NONE

DO NOT SCALE DRAWING

	NAME	DATE
DRAWN	GFF	
CHECKED		
ENG APPR.		
MFG APPR.		
Q.A.		

COMMENTS:

Premium Supply
Greenville, Texas

TITLE:

HINGE- DUMP BED

SIZE **A** | DWG. NO. 190066-3 | REV 1

SCALE: 1:2 | WEIGHT: 7.43 | SHEET 1 OF 2

5 4 3 2 1

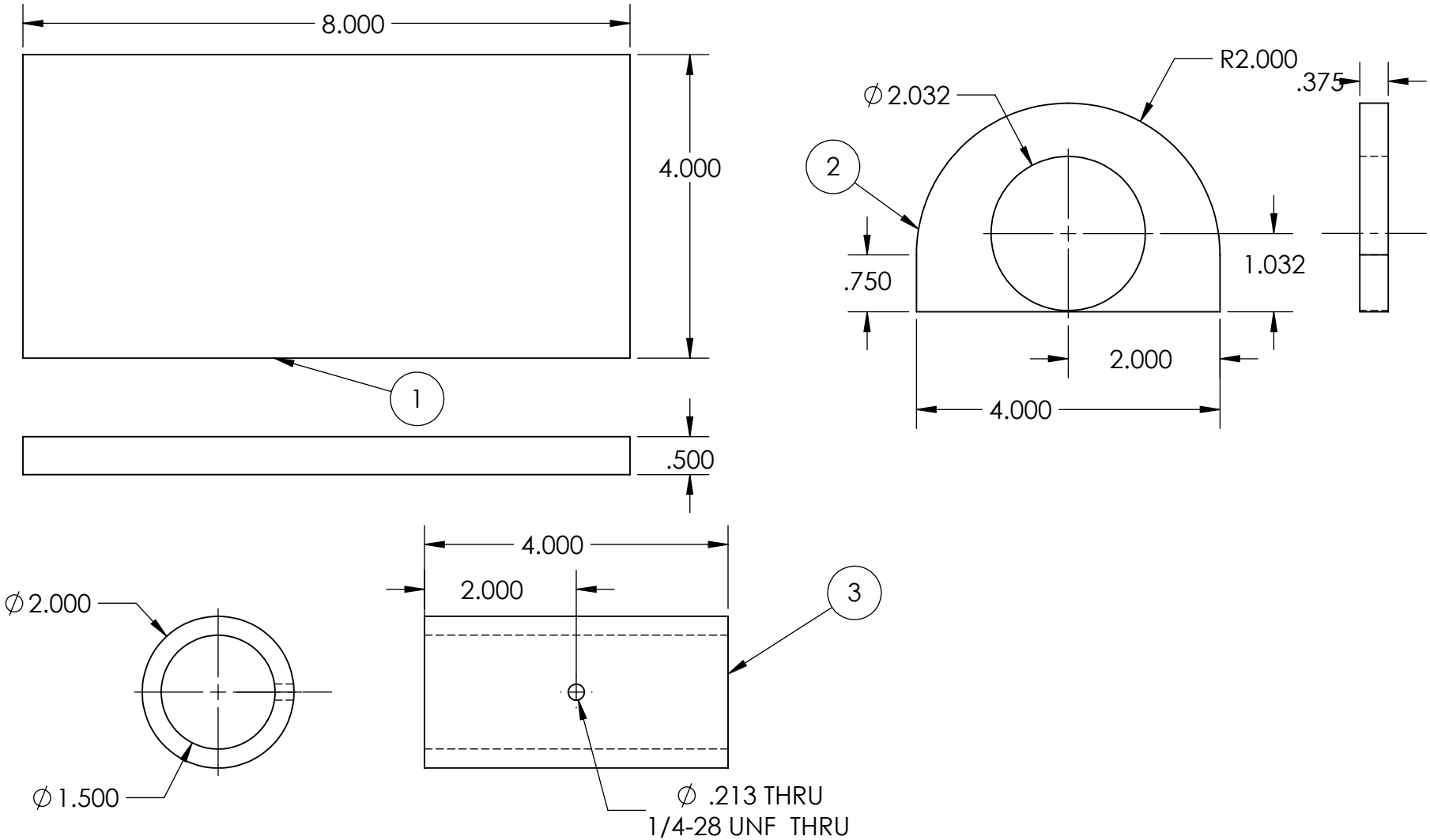

UNLESS OTHERWISE SPECIFIED:		NAME	DATE
DIMENSIONS ARE IN INCHES TOLERANCES: ±.062 ANGULAR: MACH ±.15° ANGULAR BEND ±1° HOLE DIAMETER: ±.010 MACHINING FINISH: N8	DRAWN	GFF	
	CHECKED		
	ENG APPR.		
	MFG APPR.		
INTERPRET GEOMETRIC TOLERANCING PER:	Q.A.		
MATERIAL SEE TABLE	COMMENTS:		
FINISH NONE			
DO NOT SCALE DRAWING			

PROPRIETARY AND CONFIDENTIAL

THE INFORMATION CONTAINED IN THIS DRAWING IS THE SOLE PROPERTY OF PREMIUM SUPPLY. ANY REPRODUCTION IN PART OR AS A WHOLE WITHOUT THE WRITTEN PERMISSION OF PREMIUM SUPPLY IS PROHIBITED.

Premium Supply
Greenville, Texas

TITLE:

HINGE- DUMP BED

HINGE-DUMP BED

SIZE	DWG. NO.	REV
A	190066-3	1

SCALE: 1:2 | WEIGHT: 7.43 | SHEET 2 OF 2

5 4 3 2 1

ITEM NO.	PART NUMBER	DESCRIPTION	QTY.
1	190066-1	HINGE-FRAME	1
2	190066-3	HINGE- DUMP BED	1
3	190066-2	HINGE-PIN	1
4	516-28	GREASE FITTING, 1/4-28	1

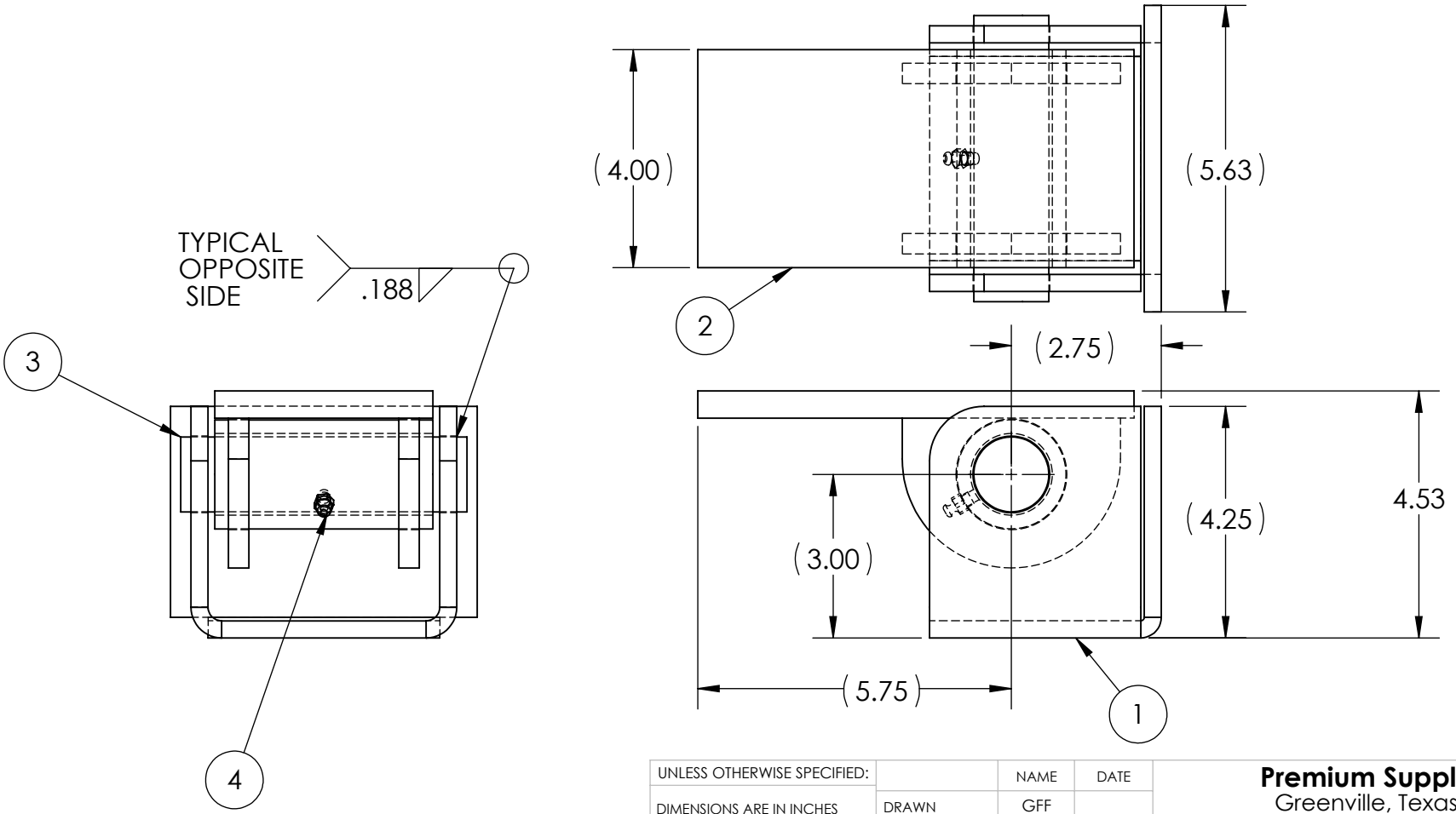

UNLESS OTHERWISE SPECIFIED:

DIMENSIONS ARE IN INCHES
TOLERANCES: ±.062
ANGULAR: MACH ±.15°
ANGULAR BEND ±1°
HOLE DIAMETER: ±.010
MACHINING FINISH: N8

INTERPRET GEOMETRIC TOLERANCING PER:

MATERIAL
SEE TABLE

FINISH
NONE

DO NOT SCALE DRAWING

	NAME	DATE
DRAWN	GFF	
CHECKED		
ENG APPR.		
MFG APPR.		
Q.A.		

COMMENTS:

Premium Supply
Greenville, Texas

TITLE:

HINGE-HEAVY DUTY

SIZE **A** | DWG. NO. A190066 | REV 1

SCALE: 1:3 | WEIGHT: 15.7 LBS | SHEET 1 OF 1

PROPRIETARY AND CONFIDENTIAL

THE INFORMATION CONTAINED IN THIS DRAWING IS THE SOLE PROPERTY OF PREMIUM SUPPLY. ANY REPRODUCTION IN PART OR AS A WHOLE WITHOUT THE WRITTEN PERMISSION OF PREMIUM SUPPLY IS PROHIBITED.

ZONE	REV.	DESCRIPTION	DATE	APPROVED
	1	DRAWN	11/3/2012	

REVISIONS

5 4 3 2 1